LifeSize® Multipoint™

LifeSize® Multipoint™ Installation Guide

March 2008

Copyright Notice

2008 LifeSize Communications Inc, and its licensors. All rights reserved.

LifeSize Communications has made every effort to ensure that the information contained in this document is accurate and reliable, but assumes no responsibility for errors or omissions. Information in this document is subject to change without notice. Companies, names, and data used in examples herein are fictitious unless noted. This document contains copyrighted and proprietary information, which is protected by United States copyright laws and international treaty provisions. No part of the document may be reproduced or transmitted, in any form or by any means, electronic or mechanical, for any purpose, without the express written permission from LifeSize Communications.

Trademark Acknowledgments

LifeSize® is the trademark of LifeSize Communications Inc. All other trademarks are the property of their respective owners.

Patent Notice

For patents covering LifeSize® products, refer to http://www.lifesize.com/support/legal.

Contacting Customer Support

If you have questions, concerns, or need assistance, contact your LifeSize Channel Partner.

Providing Customer Feedback

LifeSize Communications welcomes your comments regarding our products and services. If you have feedback about this or any LifeSize product, please send it to feedback@lifesize.com. Contact information for LifeSize Communications is as follows:

Method	Address
Internet	http://www.lifesize.com
E-mail	support@lifesize.com
Phone	(877) LIFESIZE or (877) 543-3749 (512) 347-9300
Fax	(512) 347-9301

CONTENTS

About This Manual

Related Documentation vii
Conventions Used in this Manual vii

1 *Functionality*

Introducing the LifeSize Multipoint 1
About LifeSize Multipoint Users 2
Administrators 2
Moderators and Operators 2
Conference users 2
Main Features 2
Port Capacities 6
LifeSize Multipoint-12 Port Capacity 6
LifeSize Multipoint-24 Port Capacity 7
About LifeSize Multipoint Architecture 7
About LifeSize Multipoint Topologies 8
Centralized Topology 8
Cascaded Conferences 8

2 *Setting Up Your LifeSize Multipoint*

Physical Description 10
Preparing for Installation 11
Verifying the Package Contents 12
Mounting the LifeSize Multipoint Unit in a 19-inch Rack 12
LifeSize Multipoint Unit Initial Configuration 14

Connecting to a PC 14
Setting the IP Address 15
Setting Ethernet Speed and Duplex Parameters 18
Connecting the LifeSize Multipoint Unit to the LAN 19
Video Processing Module Initial Configuration 19
Accessing the Video Processing Module Main Menu 20
Setting the IP Address 20
Changing the Configuration Software Password 21
Changing the Security Level 22
Pointing the MVP to the Controlling LifeSize Multipoint 22
Changing Advanced Configuration Settings 23
Saving Network Configuration Settings 25
Connecting the MVP to the LAN 25
Managing and Monitoring the LifeSize Multipoint Unit 25
SNMP Management 25
Local Port Monitoring Connections 25
Performing Software Upgrades 26
Accessing the LifeSize Multipoint Administrator Interface 26
Registering the Online Help 27

3 *Using the LifeSize Software Upgrade Utility*

Introduction 29
Launching the Utility 30
Upgrading Software 30

4 *Cable Connections and Pin-outs*

Unit RS-232 9-Pin Serial Port 34
RJ-45 8-Pin IP Network Port 34
RJ-45 Serial Port Adapter Cable 35
ISDN Port 35

5 *Technical Specifications*

Technical Specifications Table 37

Index 39

About This Manual

The LifeSize Multipoint Installation Guide describes how to install, configure and monitor LifeSize Multipoints.

Related Documentation

The LifeSize Multipoint documentation set is available on the LifeSize Utilities and Documentation CD-ROM and includes manuals and online helps. The manuals are available in PDF format.

Note You require Adobe Acrobat Reader version 5.0 or later to open the PDF files. You can download Acrobat Reader free of charge from www.adobe.com.

Conventions Used in this Manual

The LifeSize Multipoint is sometimes referred to as “the LifeSize Multipoint” in this manual. This manual uses the following conventions:

Convention	Description
Blue Headings in Upper Case	Level 1 headings introducing major sections.
☞	Pointing hand icon introduces a procedure.
orange link	Live links appear in orange.

1

FUNCTIONALITY

This section introduces the LifeSize Multipoint-12 and LifeSize Multipoint-24, and includes the following topics:

- Introducing the LifeSize Multipoint
- About LifeSize Multipoint Users
- Main Features
- Port Capacities
- About LifeSize Multipoint Architecture
- About LifeSize Multipoint Topologies

INTRODUCING THE LIFESIZE MULTIPOINT

The LifeSize Multipoint enables multimedia, multiparty collaboration in applications such as group conferencing, distance learning, training and video telephony. The LifeSize Multipoint supports multimedia, multiparty communications in the board room, at the desktop, in the home, or on the road over wireless.

The LifeSize Multipoint provides core IP-centric functionality, a wide range of layouts, powerful audio and video transcoding, an open API for customer application development, support of web-initiated data collaboration, and software upgradeable technology. Services are pre-configured so that they suit most conferencing requirements. However, when necessary, administrators can create customized services to suit their networks and user needs.

About LifeSize Multipoint Users

The LifeSize Multipoint provides an intuitive web interface with a single point of entry for configuring, controlling and monitoring the LifeSize Multipoint unit and conference sessions. Access to the interfaces is password-protected for four types of users—Administrators, Moderators, Operators and conference users. For more information, see LifeSize Multipoint Access Levels on page 77.

Administrators

Administrators use the **Administrator** interface for configuring, controlling and managing the LifeSize Multipoint, conference services and supporting devices and applications.

Moderators and Operators

Moderators and Operators can use the **Conference Control** interface for controlling audio, video and data connections, for selecting advanced conference view image positioning and multiple layouts, and for creating new conferences and sub-conferences.

Moderators can use the **Conference Control** interface to view conference details and manage a specific conference.

Operators have a global view of all current conferences, and can act as Moderators for all current conferences.

Conference users

Conference users participate in actual video or audio conferences.

Main Features

Table 1-1 lists the main features provided by the LifeSize Multipoint for effective audio and videoconferencing and a satisfying user experience.

Table 1-1 *Summary of LifeSize Multipoint Features*

Feature	Description
Superior video quality	Video and audio processing is carried out per user rather than per conference. Each user connects using unique, optimized audio and video settings to enjoy the best audio and video quality supported by his/her endpoint and network.

Table 1-1 *Summary of LifeSize Multipoint Features (continued)*

Feature	Description
Seamless interoperability	The LifeSize Multipoint is built on the strong foundation of the LifeSize H.323 and SIP software, ensuring full compliance and unmatched interoperability with IP and ISDN networks. The LifeSize Multipoint enables H.323 and SIP devices to participate in the same conference session. When used with the LifeSize Gateway, the LifeSize Multipoint also enables ISDN and V.35 wireless devices to participate in the same conference session.
Intuitive web-based management and control	Both the LifeSize Multipoint system and actual conference sessions are managed, configured, and dynamically modified through an intuitive, web-based interface that offers easy, high-level conference control and administrative flexibility for an enhanced user experience.
Supported protocols	■ H.323 version 4 ■ SIP RFC 3261 for the Session Initiation Protocol ■ H.243 for conference control ■ RFC 2833 for in-band DTMF with SIP ■ H.281 for far end camera control (FECC) ■ H.235 for IP-based media encryption ■ H.239 for standard simultaneous transmission of live video and presentation sharing feeds. ■ SDP (RFC 3264, 2327) ■ T.120 ■ H.320 **Note** The LifeSize Multipoint supports calls from H.323 and SIP endpoints in the same conference. Call signalling is handled on all ports regardless of the protocol type.

Table 1-1 *Summary of LifeSize Multipoint Features (continued)*

Feature	Description
Audio transcoding codecs	■ AAC-LC ■ G.711 A/µ Law ■ G.722 ■ G.722.1 ■ G.723.1 ■ G.728 ■ G.729 A and B
Unmatched video quality	The LifeSize Multipoint delivers exceptionally high quality video and audio processing, using latest industry standards and leveraging upon advanced software upgradeable DSP chips. The LifeSize QualiVision feature provides highly improved, standard-based video quality for networks with packet loss, assuring best video quality at all times. The LifeSize Multipoint achieves the best video quality by supporting the following video capabilities: ■ High definition and standard definition participants in the same conference. ■ H.261, H.263 and H.264 in the same conference ■ A choice of 26 Continuous Presence layouts ■ Up to 2 Mbps on each stream without affecting capacity ■ QCIF, CIF and 4CIF in the same conference without affecting capacity ■ 720p (capacity affected) ■ VGA, SVGA, XGA (supported for presentation channel only)
T.120 Data Collaboration support	Data collaboration is defined by the T.120 standard. Data collaboration using T.120 over the video conference connection enhances the conference by providing the tools for conference participants to share data instantaneously.

Table 1-1 *Summary of LifeSize Multipoint Features (continued)*

Feature	Description
Security and privacy	■ Administrator and operator password protection for accessing the LifeSize Multipoint web interfaces. ■ Optional PIN protection for joining a conference and web access. ■ Additional PIN protection for conference Moderator Control. ■ The LifeSize Multipoint uses H.235-based encryption to achieve secure communication with endpoints that support this standard.
In-conference control using DTMF or H.243	During a conference, participants may use their endpoint remote control or keypad to perform actions such as mute, volume control, changing video layouts and inviting participants. Users interact with the LifeSize Multipoint via DTMF signaling or the onscreen GUI of H.243-compliant endpoints.
Optional no self see	The administrator can configure the LifeSize Multipoint service to remove the self-view for each conference participant. This feature enables more effective use of the video screen. **Note** No self-see display is not available for high definition participants, even if the no self-see option is enabled.
IVR messages	The LifeSize Multipoint includes pre-recorded greetings to conference participants and announcements as each new participant joins the conference. Using the LifeSize Customization Utility, IVR messages can be recorded to provide custom greetings and announcements.

Port Capacities

The LifeSize Multipoint-12 and LifeSize Multipoint-24 are delivered with a predetermined number of ports.

The LifeSize Multipoint supports Continuous Presence High Definition (CP HD) services. CP HD services support split-screen (continuous presence) up to 2 Mbps and offer resolutions of 1280 x 720 pixels (720p).

The LifeSize Multipoint supports switched High Definition (HD) video service types. The switched HD service enables Voice Activated single-screen displays at up to 2 Mbps, and offers resolutions of 1280 x 720 pixels (720p) and 1920 x 1080 pixels (1080p). Switched HD service types also enable you to set a minimum downspeeding bandwidth rate which is common to all endpoints participating in a conference.

LifeSize Multipoint-12 Port Capacity

LifeSize Multipoint-12 supports a fixed number of ports as follows:

- 72 ports of fully transcoded audio (48 ports when using G.728).
- 24 ports of fully processed desktop video of up to 384 Kbps.
- 12 ports of fully processed high rate video of up to 4CIF (6 ports when using encryption above 768 Kbps).
- 4 ports of High Definition Continuous Presence video (2 ports when using encryption above 768 Kbps).
  - Fully transcoded high rate video.
  - Any Continuous Presence layout.
  - All ports are fully video processed.
  - Any mixture of H.261/H.263/H.264.
  - Mixed QCIF/CIF/4CIF/720p conferences (4CIF is provided with H.263 at 15fps).
  - Unlimited number of conferences of which one can be a high definition conference at any given time.

Note When using a High Definition Switched Video service type, only a single screen layout is available.

High definition participants must have H.264 only and receive 720p in order to view the conference in high definition, otherwise the endpoint is considered as a standard definition endpoint.

LifeSize Multipoint-24 Port Capacity

LifeSize Multipoint-24 supports a fixed number of ports as follows:

- 72 ports of fully transcoded audio (48 ports when using G.728).
- 48 ports of fully processed desktop video of up to 384 Kbps.
- 24 ports of fully processed high rate video of up to 4CIF (12 ports when using encryption above 768 Kbps).
- 16 ports of fully processed High Definition Continuous Presence video (8 ports when using encryption above 768 Kbps).
  - Fully transcoded high rate video.
  - Any Continuous Presence layout.
  - All ports are fully video processed.
  - Any mixture of H.261/H.263/H.264.
  - Mixed QCIF/CIF/4CIF/720p conferences (4CIF is provided with H.263 at 15fps).
  - Unlimited number of conferences of which one can be high definition conferences at any given time.

Note When using a High Definition Switched Video service type, only a single screen layout is available.

High definition participants must have H.264 only and receive 720p in order to view the conference in high definition, otherwise the endpoint is considered as a standard definition endpoint.

About LifeSize Multipoint Architecture

The LifeSize Multipoint enables both voice-only and video conference calls for H.323, SIP, H.320 and regular PSTN network telephones. H.323 and SIP devices can connect to a conference directly through the LifeSize Multipoint. Other devices such as voice telephones and video conferencing terminals (H.320) can connect to a conference via a gateway, such as the LifeSize Gateway.

The LifeSize Multipoint supports devices that can send and receive video streams, as well as those that cannot send but only receive video streams. This means that terminals without a video camera or video capturing capabilities can participate in a conference as voice-only participants while benefiting from seeing the other participants.

About LifeSize Multipoint Topologies

The LifeSize Multipoint can work in a centralized or cascaded topology. This section describes these two options.

Centralized Topology

In a centralized topology, the LifeSize Multipoint performs media processing for all connected terminals. The LifeSize Multipoint can handle multiple conferences simultaneously.

Cascaded Conferences

The LifeSize Multipoint allows you to combine two or more conferences resulting in a larger conference with many more participants. This is called *cascading*. Cascading creates a distributed environment that helps reduce the drain on network resources. In addition, the processing resources required by the LifeSize Multipoint are distributed between participating LifeSize Multipoints. Costly telephone or ISDN line usage can be further reduced with the mediation of a gateway.

Cascading occurs when one conference with “x” number of participants invites another conference with “y” number of participants. The two conferences effectively become one large conference. The bandwidth required across a cascaded conference link is only that of one audio/video stream between the two conferences. This is significantly less than the accumulated bandwidth of all the participants. Each separate LifeSize Multipoint unit participating in a conference retains control of its individual conference resources and participants.

2

Setting Up Your LifeSize Multipoint

This section introduces the LifeSize Multipoint solution and details the components that LifeSize Multipoint includes, and includes the following topics:

- Physical Description
- Preparing for Installation
- Verifying the Package Contents
- Mounting the LifeSize Multipoint Unit in a 19-inch Rack
- LifeSize Multipoint Unit Initial Configuration
- Video Processing Module Initial Configuration
- Managing and Monitoring the LifeSize Multipoint Unit
- Accessing the LifeSize Multipoint Administrator Interface
- Registering the Online Help

PHYSICAL DESCRIPTION

Each LifeSize Multipoint unit internally contains two cards:

- Signaling and audio card (LifeSize Multipoint—the upper card)
- Video processing card (MVP—the lower card)

The two cards work together to perform audio and videoconferencing, but each card requires a unique IP address. The cards communicate with each other using IP as the backbone.

Note For correct operation, the MVP card must register with the LifeSize Multipoint.

This section provides a physical description of the LifeSize Multipoint-12 and LifeSize Multipoint-24 units.

The LifeSize Multipoint unit has a 10/100BaseT Ethernet port on the front panel that uses an RJ-45 connector to connect to the network. There is an asynchronous, 9-pin serial-port that you can use with a hyperterminal program to configure and monitor the module.

Figure 2-1 shows the front panel of the LifeSize Multipoint unit. Table 2-1 describes the components of the front panel.

Figure 2-1 *LifeSize Multipoint Front Panel*

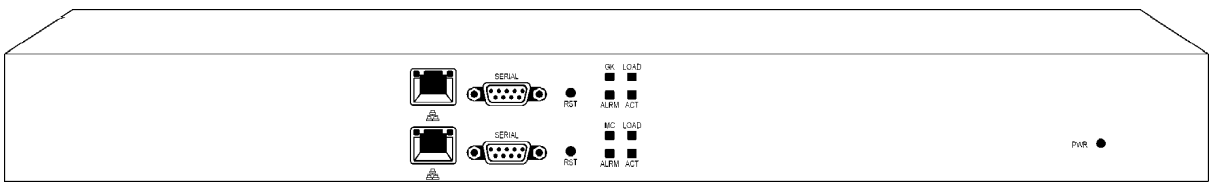

Table 2-1 *Front Panel Components*

Component	Description
Ethernet connector	An RJ-45 connector that provides the primary Ethernet connection for the IP network port.
Serial connector	A DB-9 connector that allows you to connect a PC terminal for local configuration.

Table 2-1 Front Panel Components (continued)

Component	Description
RST button	Allows you to reset the LifeSize Multipoint unit manually.
GK and MC LEDs	Lights green when the LifeSize Multipoint unit is registered with a gatekeeper.
LOAD LED	Lights green when more than 50% of the LifeSize Multipoint unit resources are in use.
ACT LED	Lights green to indicate that there is at least one currently active conference on the LifeSize Multipoint unit.
ALRM LED	Lights green to indicate that an error has occurred and the LifeSize Multipoint unit requires resetting.
Ethernet LEDs	The top part of the Ethernet connector contains two LED indicators. The left-hand LED lights green when the local IP network link is active. The right-hand LED lights green if the connection speed is 100 Mbps, and is off when the connection speed is 10 Mbps.

Preparing for Installation

This section describes the installation requirements for installing the LifeSize Multipoint unit.

- Proper clearance at the sides of the unit to allow adequate ventilation, and at least 20 cm clearance at the back of the unit to allow access to cable connections
- A PC with a serial port and terminal emulation software to assign the LifeSize Multipoint unit an IP address
- Two dedicated IP addresses—one each for the LifeSize Multipoint and MVP units
- The IP address of the default Gateway that the LifeSize Multipoint unit will use to communicate across the network
- For an H.323 environment, the IP address of the H.323 gatekeeper with which you want the LifeSize Multipoint unit to register
- Available IP network ports on the switch for the LifeSize Multipoint unit
- A grounded AC power outlet

- A 10BaseT or 100BaseT LAN cable
- Ambient room temperature range of 32° to 104°F (0° to 40°C)
- Non-condensing relative humidity range of 5% to 90%

Verifying the Package Contents

Inspect the contents of the box for shipping damage. Report any damage or missing items to your distributor or reseller. Table 2-2 lists the package contents for the LifeSize Multipoint unit.

Table 2-2 *Package Contents with LifeSize Multipoint-12 or LifeSize Multipoint-24 Unit*

Product	Contents
LifeSize Multipoint unit	■ LifeSize Multipoint-12 or LifeSize Multipoint-24 unit ■ Power cable (depending on customer location) ■ Terminal cable ■ 2 LAN cables (1 for the LifeSize Multipoint, 1 for the video processing module) ■ Rack mounting kit (two brackets and six screws) ■ Four rubber feet ■ CD-ROM containing product documentation, utilities, and online help files.

Mounting the LifeSize Multipoint Unit in a 19-inch Rack

You can optionally mount the LifeSize Multipoint unit in a standard 19-inch rack. Two mounting brackets and a set of screws are included in the LifeSize Multipoint unit shipping box.

☞

Procedure

1. Disconnect all cables including the power cables.
2. Place the LifeSize Multipoint unit right-side up on a hard flat surface, with the front panel facing you.
3. Position a mounting bracket over the mounting holes on each side of the LifeSize Multipoint unit, as shown in Figure 2-2.

Figure 2-2 *Fitting a Bracket for Rack Mounting*

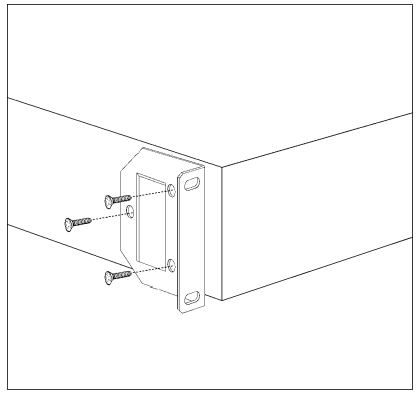

4. Pass the screws through the brackets and tighten them into the screw holes on each side of the LifeSize Multipoint unit using a suitable screwdriver.
5. Insert the LifeSize Multipoint unit into the 19-inch rack.
6. Fasten the brackets to the side rails of the rack.
7. Make sure that the air vents at the sides of the LifeSize Multipoint unit are not blocked.

LifeSize Multipoint Unit Initial Configuration

Initial monitoring and administration of the LifeSize Multipoint unit are performed from a remote PC via a serial connection. This allows you to access the boot configuration menu of the LifeSize Multipoint unit. At power-up, the LifeSize Multipoint unit goes through the following boot phases:

- **Auto-boot**—The embedded operating system initializes and displays basic information.
- **Configuration menu**—A 6-second countdown allows you to enter the configuration menu.
- **Initialization**—The LifeSize Multipoint unit completes its boot sequence and is ready for operation.

Note You can perform serial port configuration of the LifeSize Multipoint unit only at startup, during a short period indicated by a 6-second countdown. Once the initialization phase is complete, the only way you can access the configuration menu is by restarting the LifeSize Multipoint unit.

Connecting to a PC

This section describes how to use the serial port connection to configure the LifeSize Multipoint unit with an IP address.

Procedure

1. Locate the terminal cable shipped with the LifeSize Multipoint unit.
2. Connect the end labeled **PC** to the serial port on the computer.
3. Connect the end labeled **Unit** to the upper serial port connector on the LifeSize Multipoint unit front panel.

Note The PC terminal should have an installed terminal emulation application, such as HyperTerminal.

Setting the IP Address

This section describes how to use the serial port to configure the unit with an IP address and other address information.

The upper serial port on the LifeSize Multipoint unit front panel is used to assign a new IP address to your LifeSize Multipoint unit. You can assign the IP address before or after you connect the hardware to the network.

Before You Begin

Gather the items listed in Table 2-3 to assign an IP address to the LifeSize Multipoint unit.

Table 2-3 *Requirements for Setting the IP Address*

Requirements	Notes
Dedicated IP address for the LifeSize Multipoint unit	
IP address of the default router the LifeSize Multipoint unit uses to communicate over the network	
Subnet mask for the LifeSize Multipoint unit if applicable	
Domain Name Server and domain name for LifeSize Multipoint unit if applicable	
PC with available serial port and terminal emulator software installed	
RS-232 terminal cable (shipped with the unit)	

Procedure

1. Connect the RS-232 terminal cable to the PC terminal.
2. Connect the power cable.
3. Start the terminal emulation application on the PC.
4. Set the communication settings in the terminal emulation application on the PC as follows:

- Baud rate: 9600
- Data bits: 8
- Parity: None
- Stop bits: 1
- Flow control: None

5 Turn on the power to the LifeSize Multipoint unit.

A log of the auto-boot events appears on the computer.

6 When the message “Press any key to start configuration” appears on the screen, press any key within 6 seconds.

The network configuration **Main** menu appears as follows:

```
Press any key to start configuration...
Main menu
N: Configure default network port values
P: Change the configuration software password
S: Configure network security level
A: Advanced configuration menu
Q: Quit

Select:
```

Caution If you do not press a key before the countdown ends, the device continues its initialization and you can only configure the device by pressing the **RST** button on the front panel.

---

7 At the prompt, enter **N** to configure default network port values and press **Enter**.

8 At the **Enter IP address for Interface No. 1** prompt, enter the IP address you want to assign to the LifeSize Multipoint unit and press **Enter**.

Caution Do not use leading zeros in the IP address.

---

9 At the **Enter Default Router IP Address** prompt, enter the IP address of the router that you want the LifeSize Multipoint unit to use and press **Enter**.

Caution Do not use leading zeros in the IP address.

10 At the **Enter IP Mask (HEX)** prompt, enter the subnet mask as follows:

- Convert the subnet mask IP address to hexadecimal notation, enter the hexadecimal number at the prompt, and press **Enter**.

  For example, for the subnet mask 255.255.255.0 the hexadecimal value you enter is FFFFFF00.

Note You can use the desktop calculator on your computer to convert the subnet mask ID to hexadecimal notation.

- If a subnet mask is not used, press **Enter**.

After you enter the subnet mask parameter, the unit updates the boot line parameter and reboots.

11 At the network configuration **Main** menu, enter **Q** to save your changes and allow the device to complete the boot process.

Caution Configuration of any of the parameters other than **N: Configure default network port values** may alter the function of the device and should not be performed by an unauthorized person.

Setting Ethernet Speed and Duplex Parameters

You can use the serial port to set the Ethernet speed and duplex parameters that you want the LifeSize Multipoint to use.

Note We recommend that you manually set these parameters on the LifeSize Multipoint and switch to Ethernet speed 100 Mbps and full duplex.

Procedure

1. Access the LifeSize Multipoint through the serial port and start a terminal emulator session.

Note If the LifeSize Multipoint is already running, you need to reboot or restart the device.

2. When the message “Press any key to start configuration” appears on the screen, press any key within 6 seconds.

   The network configuration **Main** menu appears.
3. At the prompt, enter **A** to display the **Advanced Configuration** menu and press **Enter**.

   The **Advanced Configuration** menu appears.
4. At the prompt, enter **3** to select “Change LAN port Settings” and press **Enter**.
5. At the prompt, enter the number or letter for one of the following:
   - **1** - 10Mbps Half Duplex
   - **2** - 100Mbps Half Duplex
   - **3** - 10Mbps Full Duplex
   - **4** - 100Mbps Full Duplex
   - **5** - Auto
   - **Q** - Quit

   Enter this value to retain the current setting. The default setting is Auto.
6. Press **Enter**.

   The network configuration **Main** menu appears.

7. At the **Network Configuration** menu, do one of the following:
   - Enter the letter for the set of parameters that you want to configure.
   - Enter **Q** to save your changes and allow the device to complete the boot process.

Connecting the LifeSize Multipoint Unit to the LAN

This section describes how to connect the LifeSize Multipoint unit to the Local Area Network (LAN).

Procedure

1. Connect the supplied LAN cable from your network switch to the 10/100BaseT Ethernet port on the front panel of the LifeSize Multipoint unit. The 10/100BaseT port accepts an RJ-45 connector.
2. Turn on the power to the LifeSize Multipoint unit.

Video Processing Module Initial Configuration

You must also configure an IP address for the video processing module. The IP address of the video processing module must be different than the IP address configured for the LifeSize Multipoint unit.

Initial monitoring and administration of the video processing module are performed from a remote PC using a terminal emulation application, such as HyperTerminal. To make the serial connection, connect a PC terminal to the lower serial port on the front panel of the LifeSize Multipoint unit as described in Connecting to a PC on page 14. The serial configuration utility runs as a target configuration service. You can use the serial configuration utility to:

- Configure default network port values.
- Modify the configuration software password.
- Modify the LifeSize Multipoint unit IP address.
- Modify advanced configuration settings such as the web server port and LAN port, and to restore the factory configuration.

Accessing the Video Processing Module Main Menu

You access the video processing module **Main** configuration menu in the same way as you access the LifeSize Multipoint unit network configuration **Main** menu as described in Procedure on page 15.

The video processing module **Main** configuration menu appears as follows:

```
Main menu
N: Configure default network port values
P: Change the configuration software password
S: Configure network security level
M: Change MCU ip address
A: Advanced configuration menu
Q: Quit

Select:
```

Setting the IP Address

This section describes how to use the serial port to configure the unit with an IP address and other address information.

The lower serial port on the LifeSize Multipoint unit front panel is used to assign a new video processing module an IP address. You can assign the IP address before or after you connect the hardware to the network.

Procedure

1. At the prompt, enter **N** to configure default network port values and press **Enter**.
2. The default network properties screen appears as follows:

```
Enter IP Address for default Interface
  Without leading zeros <172.20.35.110:ffff0000>
Enter Default Router IP Address for default Interface
 Without leading zeros <current default Gateway IP
address>:
```

3. At the **Enter IP address for default interface** prompt, enter the IP address you want to assign to the video processing module followed by the subnet mask, in the format <IP address:subnet mask> and press **Enter**.

Note You must enter the subnet mask in the hexadecimal format.

4. At the **Enter Default Router IP Address** prompt, enter the IP address of the default gateway that you want the video processing module to use and press **Enter**.

   Allow the unit to complete the reboot process. A new emulator session begins.

5. At the **Main** menu, do one of the following:
   - Enter the letter for the set of parameters that you want to configure.
   - Enter **Q** to save your changes and allow the device to complete the boot process.

Caution Configuration of any of the parameters other than **N: Configure default network port values** may alter the function of the device and should not be performed by an unauthorized person.

Changing the Configuration Software Password

You can use the serial port to change the configuration software password.

Procedure

1. At the prompt, enter **P** to change the configuration software password and press **Enter**.

   The user profile screen appears as follows:

   ```
   Enter user name:
   Enter new password:
   ```

2. At the **Enter user name** prompt, enter the new user name and press **Enter**.
3. At the **Enter user password** prompt, enter the new password and press any key to return to the video processing module **Main** menu.

Changing the Security Level

You can use the serial port to change the security level. Security levels are as follows:

- 0 (low)—Allows Telnet, FTP and ICMP to access the MVP.
- 1 (medium)—Allows only ICMP access to the MVP.
- 2 (high)—Allows no access to the MVP.

Procedure

1. At the prompt, enter **S** to configure the network security level and press **Enter**.

   The security level screen appears as follows:

   ```
   The current security level is [0 low].
   Enter a new security level (0-low, 1-medium. 2-high):
   ```

2. Enter the new security level required and press **Enter**.

   The updated security level screen appears as follows:

   ```
   The current security level is [0 low].
   Enter a new security level (0-low, 1-medium. 2-high):
   2
   Board security level changing to [2 high]:
   Set icmpRequestBlock to 2
   The new security level is [2 high].
   ```

3. The video processing module **Main** menu displays.

Pointing the MVP to the Controlling LifeSize Multipoint

You can use the serial port to point the MVP to the IP address of the controlling LifeSize Multipoint unit.

Procedure

1. At the prompt, enter **M** to change the LifeSize Multipoint IP address and press **Enter**.

   The LifeSize Multipoint IP address screen displays as follows:

   ```
   Enter MCU ip address
   Without leading zeros <current IP address>:
   ```

2 Enter the IP address of the LifeSize Multipoint and press any key to return to the MVP **Main** menu.

Changing Advanced Configuration Settings

You can use the serial port to change the following advanced configuration settings:

- Web server port (for future use)
- Restore factory configuration (for future use)
- LAN port settings
- Disable DSP reset

Procedure

1. At the prompt, enter **A** to access the **Advanced Configuration** menu.

   The **Advanced Configuration** menu appears as follows:

   ```
   Advanced configuration menu
   Q: Quit
   1: Configure web server port
   2: Restore factory configuration
   3: Change Lan port Settings
   4: Disable DSP reset

   Select:
   ```

2. At the prompt, enter **1** to configure the web server port.

   The current web port server setting displays.

3. At the prompt, enter **2** to restore the factory configuration settings.

   You are asked to confirm your choice as follows:

   ```
   Select: 2
   Are you sure you want to restore factory configuration?
   [y, n]:
   ```

4. Enter **y** or **n**.

5. At the prompt, enter **3** to change Ethernet speed and duplex parameters.

   The network interface card settings screen appears as follows:

```
Choose : 1 - 10Mbps  Half Duplex
       : 2 - 100Mbps Half Duplex
       : 3 - 10Mbps  Full Duplex
       : 4 - 100Mbps Full Duplex
       : 5 - Auto
     other - Quit
       :
```

6. Enter either a number between 0 and 5 inclusive, representing the required option.
7. Press any other key to quit without changing the network working mode.
8. At the prompt, enter **4** to disable the DSP reset facility.

Note After options **Q** and **1-3**, press any key to return to the video processing module **Main** menu. After option **4**, the video processing module **Main** menu displays automatically.

Caution Only qualified technical personnel should modify the DSP reset function settings.

Saving Network Configuration Settings

Modified network configuration settings are automatically saved when you exit the video processing module **Main** menu.

Procedure

1. Ensure you have completed your configuration.
2. At the prompt, enter **Q** to exit the video processing module **Main** menu.

   The video processing module **Main** menu closes and your machine will automatically reboot.

Connecting the MVP to the LAN

This section describes how to connect the MVP to the Local Area Network (LAN).

Procedure

1. Connect the supplied LAN cable from your network switch to the 10/100BaseT Ethernet port on the front panel of the MVP unit. The 10/100BaseT port accepts an RJ-45 connector.
2. Turn on the power to the MVP unit.

Managing and Monitoring the LifeSize Multipoint Unit

You can manage and monitor the LifeSize Multipoint unit locally or from remote connections. You can also upgrade LifeSize Multipoint software.

SNMP Management

The LifeSize Multipoint unit is equipped with an SNMP agent. You can access the LifeSize Multipoint unit using an SNMP management client.

Local Port Monitoring Connections

You should access the LifeSize Multipoint unit using a local port connection for preliminary configuration and monitoring.

Serial Port

The LifeSize Multipoint unit includes a DB-9 serial port connector and an RJ-45 serial port connector. The DB-9 serial port is used to access the boot sequence menu from a local PC. Using a terminal emulation application running on the PC, you can assign an IP address and subnet mask to the LifeSize Multipoint unit.

The RJ-45 serial port is used to connect a PC terminal to the LifeSize Multipoint unit.

Performing Software Upgrades

You can perform software upgrades by using the LifeSize Upgrade Utility to upload files via a network or modem connection to the LifeSize Multipoint unit. For more information, see the Using the LifeSize Software Upgrade Utility chapter.

Accessing the LifeSize Multipoint Administrator Interface

The LifeSize Multipoint Administrator is a web interface that allows you to configure general LifeSize Multipoint unit settings, monitor LifeSize Multipoint unit operation, create or edit services, manage media processor units and perform maintenance.

You access the LifeSize Multipoint Administrator web interface in the LifeSize Multipoint unit access window by signing in as an Administrator.

You can use your web browser from any remote PC station to monitor and to configure the LifeSize Multipoint unit. A web server is installed in the LifeSize Multipoint unit to facilitate the use of the remote web-based monitoring and management.

Access to the LifeSize Multipoint configuration interface is controlled by a user name and a password. Once you have entered the settings you want, you should upload them to the unit for them to take effect, or you can save them to a configuration file to be loaded at a later time.

Before You Begin

The following requirements are necessary to access the LifeSize Multipoint Administrator web interface:

- A Java-compliant browser. Microsoft Internet Explorer version 5.5 or later is recommended.
- The LifeSize Multipoint unit IP address or a web link to the LifeSize Multipoint unit.

- The required user name and password.

Note For first-time installation, you must assign an IP address to the LifeSize Multipoint unit using a serial port connection before you can access the web interface. For more information, see Setting the IP Address on page 15.

Procedure

1. Launch your browser and enter the IP address or the name of the LifeSize Multipoint unit followed by **/admin**.

   For example, **http://125.221.23.44/admin** or **board_name/admin.**

   The LifeSize Multipoint access window appears.
2. Enter the Administrator user name and password in the appropriate fields and click **Go**. The default global user name is *admin*. The default password is <null>.

   The LifeSize Multipoint Administrator interface appears.

Note If you try to sign in as an Administrator and another Administrator is currently signed in, the LifeSize Multipoint signs you in as a Read only user. The words *Read Only* appear at the top of the window and a pop-up displays the IP address of the Administrator already signed in. Read only users cannot edit any of the LifeSize Multipoint settings.

Registering the Online Help

The LifeSize Multipoint is equipped with online help that is linked to the LifeSize Multipoint Administrator web interface. The help library is stored on the LifeSize web site.

The Online Help folder available from the CD-ROM included in the product box contains the online help library. If you wish to install the online help on a shared network location and link it to the LifeSize Multipoint Administrator, perform the following steps:

Procedure

1. Copy the **Online Help** folder from the LifeSize Multipoint CD-ROM to a shared folder on a PC on your network. For example:

   `\\myComputer\LifeSize Multipoint\Online Help`

2. Log in to the LifeSize Multipoint Administrator interface.
3. In the **Online help URL** field of the Device **Web** tab, enter the directory path to the help files you installed on your PC.

   The path must have the form:

   `file://computerName/sharedDirectory`

   where `computerName` is the name of the computer on the network and `sharedDirectory` is the path to the **Online Help** folder on the CD-ROM. For example:

   `file://myComputer/LifeSize Multipoint/Online Help`

4. Click **Upload** in the LifeSize Multipoint Administrator toolbar, followed by **Refresh**.
5. You may need to log out and log back in to the LifeSize Multipoint Administrator for the change to take effect.

3

Using the LifeSize Software Upgrade Utility

This section describes the LifeSize Software Upgrade Utility, and includes the following topics:

- Introduction
- Launching the Utility
- Upgrading Software

Introduction

The LifeSize Software Upgrade Utility is an interactive GUI interface that enables you to upgrade LifeSize software installed on LifeSize Multipoint units.

The LifeSize Software Upgrade Utility enables you to select files to be uploaded via a network or modem connection to the LifeSize Multipoint. You can select either to perform a typical upgrade which includes all the new files or a customized upgrade which enables you to select which files to upload.

The upgrade files are uploaded and then burned into the memory of the LifeSize Multipoint.

Before You Begin

LifeSize Multipoint automatically saves configuration settings before a software upgrade takes place. However, it is recommended that you save all configuration information using the Export button in the LifeSize Multipoint web interface toolbar. You can retrieve all these settings after the software upgrade is complete by using the Import button in the LifeSize Multipoint web interface toolbar.

Launching the Utility

This section describes how to install and launch the LifeSize Software Upgrade Utility.

Procedure

1. Download the *UpgradeUtility.exe* file from the LifeSize web site at www.lifesize.com/service.
2. Double click the UpgradeUtility.exe file to run the Software Upgrade Utility.

   The upgrade files are extracted and the **Upgrade Utility** dialog box appears.

Upgrading Software

This section describes how to use the Software Upgrade Utility to upgrade LifeSize software installed on LifeSize Multipoint.

Procedure

1. In the **General Information** section of the **Upgrade Utility** dialog box, enter the IP address of the LifeSize Multipoint you want to upgrade.
2. In the **Login Information** section, enter the administrator user name and password for the target LifeSize Multipoint, as configured in the LifeSize Multipoint network configuration settings.
3. (Optional) Modify the read and write community settings for the target LifeSize Multipoint as follows:
   - Click **Customize SNMP Settings**.

     The **Customize SNMP Settings** dialog box displays.
   - Enter the required read community and write community values.

Note We recommend that you modify the default settings for security purposes.

- Click **OK** to return to the **Upgrade Utility** dialog box.

4. (Optional) Select the components of the target LifeSize Multipoint you want to upgrade as follows:
   - Click **Customize**.

     The **Customize** dialog box appears.
   - Check the LifeSize Multipoint components you want to upgrade in the **Select the components you want to upgrade** list.
   - Click **OK** to return to the **Upgrade Utility** dialog box.
5. Click **Upgrade** to upgrade all components of the LifeSize Multipoint software (or only those components you manually selected via the **Customize** option).

   The LifeSize Software Upgrade Utility informs you whether or not the upgrade is successful.

Note When the upgrade is complete, the LifeSize Multipoint automatically resets itself and starts operation with the new software version.

4

Cable Connections and Pin-outs

This section describes the pin-to-pin and pin-out configurations of the connectors and cables of the LifeSize Multipoint unit, including the following topics:

- Unit RS-232 9-Pin Serial Port
- RJ-45 8-Pin IP Network Port
- RJ-45 Serial Port Adapter Cable

Unit RS-232 9-Pin Serial Port

Table 4-1 describes the LifeSize Multipoint unit RS-232 9-pin D-type serial port pin-out configuration.

Table 4-1 *RS-232 9-pin D-Type Serial Port Pin-out*

Pin	Function	I/O
1	NC	
2	RXD	Input
3	TXD	Output
4	NC	
5	GND	
6	NC	
7	NC	
8	NC	
9	NC	

RJ-45 8-Pin IP Network Port

Table 4-2 describes the pin-out configuration of the RJ-45 IP network port.

Table 4-2 *Pin-out Configuration of the RJ-45 IP Network Port*

Pin	Function	I/O
1	TXD+	Output
2	TXD+	Output
3	RXD+	Input
4	NC	
5	NC	
6	RXD-	Input
7	NC	
8	NC	

RJ-45 Serial Port Adapter Cable

Table 4-3 describes the pin-to-pin configuration of the RJ-45 to DB-9 adapter cable used to connect a PC terminal to the RJ-45 serial port. This cable is provided with the LifeSize Multipoint unit.

Table 4-3 *Pin-to-Pin Configuration of the RJ-45 to DB-9 Adapter Cable*

RJ-45 (Male)	DB-9 (Female)	Function
1	NC	
2	NC	
3	3	TXD
4	NC	
5	5	GND
6	2	RXD
7	NC	
8	NC	

ISDN Port

Table 4-4 describes the ISDN Port RJ-45 connector pin-out configuration.

Table 4-4 *ISDN Port RJ-45 Connector Pin-out*

Pin	Function
1	RXD +
2	RXD -
3	NC
4	TXD +
5	TXD -
6	NC
7	NC
8	NC

5

TECHNICAL SPECIFICATIONS

This section provides technical specifications for the LifeSize Multipoint.

TECHNICAL SPECIFICATIONS TABLE

Table 5-1 *LifeSize Multipoint Unit Technical Specifications*

Unit Dimensions	■ Height: 1U (1.75 inches or 44.45 mm) ■ Width: 17.25 inches (438.15 mm) ■ Depth: 10 inches (254 mm) ■ Weight: 4.45 kg (9.81 lbs)—may vary according to configuration
LED Indicators	■ ETHERNET: □ Link □ Connection Speed ■ GK ■ LOAD ■ ALRM ■ ACT ■ MC (video processing module only)
Push Buttons	■ RST

Table 5-1 *LifeSize Multipoint Unit Technical Specifications (continued)*

Communication Interfaces	■ Ethernet 10/100 Mbps auto-negotiate speed select ■ Asynchronous serial port RS-232 connected via 9-pin D-type connector ■ RJ-45 serial port (for video processing module) ■ SVGA port (for video processing module) ■ USB connector (for video processing module)
Chipset	■ PowerPC MPC755 32-bit RISC microprocessor running at 400MHz or more ■ MPC8260 secondary microprocessor running at 200/133MHz or more
Operating System	■ RTOS, VxWorks 5.4
Memory	■ 32 MB on-board flash memory for field upgrades, supports up to 64 MB ■ 1 MB L-2 Cache at 200 MHz or more ■ 128 MB SDRAM, supports up to 256 MB
Failsafe	■ Watchdog timer built in
Power Supply	■ Input 100-240VAC autoswitched ■ Output + 3.3VDC, + 5VDC, + 12VDC ■ Maximum power load 150W

INDEX

NUMERICS

19-inch rack 12
  mount unit 12
6-second countdown 14, 16
9-pin serial-port 10

A

ACT LED See *LED indicators*
Administrator interface 2, 26
Advanced Configuration menu 18, 20, 23
ALRM LED See *LED indicators*
architecture 7
audio
  codecs 4
auto-boot 14

B

boot configuration menu 14

C

cables
  RJ-45 8-pin IP network port 34
  RJ-45 serial port adapter 35
  RS-232 9-pin serial port 34
cascaded conferences 8
chipset 38
codecs
  audio transcoding 4
communication interfaces 38
communication settings 15
Conference Control interface 2
Configuration menu 14
Continuous Presence 4

D

data collaboration 4
DB-9 10, 26
DTMF 5
duplex parameters 18, 24

E

encryption 5
Ethernet
  cable 12
  port 10
  speed 18, 24

F

failsafe 38
front panel 10
  components 10

G

GK LED See *LED indicators*
global user name 27

H

H.235 3
H.239 3
H.243 5
High Definition 6

I

initial configuration 14
initialization 14
installation procedures
  access administrator interface 27
  change advanced configuration settings 23
  change configuration software password 20, 21
  change IP address 20
  change LAN port settings 23
  change password 16
  change security level 22
  change unit IP address 22
  configure default network port values 16, 20
  configure IP address for unit 15
  configure IP address for video processing module 20
  configure network security level 16, 20
  configure web server 23
  configure web server port 23
  connect to the serial port 14
  connect unit to the LAN 19, 25
  disable DSP reset 23
  display Advanced Configuration menu 20
  display advanced configuration menu 16
  mount unit in a 19-inch rack 12
  restore factory configuration 23
  restore factory settings 23
  save network configuration settings 25
  set default network properties 20
  set duplex parameters 18, 24
  set Ethernet speed 18, 24
installation requirements 11
interoperability 3
IP address
  change for unit 22
  configure for unit 15
  configure for video processing module 20
IVR 5

L

LAN cable 12
layouts
  Continuous Presence 4
LED indicators 10, 37
local port monitoring 25

M

Main menu 20, 23, 24
MC LED See *LED indicators*
memory 38

N

Network Configuration menu 16, 18, 20

O

online help 27
operating system 38
optional no self see 5

P

package contents 12
password
  change configuration software password 21
pin-out configuration
  RJ-45 IP network port 34
  RS-232 9-pin D-type serial port 34
pin-to-pin configuration
  RJ-45 to DB-9 adapter cable 35
ports
  IRJ-45 8-pin ISDN 35
  RJ-45 IP 34
  RJ-45 serial 35
  RS-232 9-pin serial 34
power supply 38
privacy 5
protocols 3
push buttons 37

R

remote control 5
remote management and monitoring 25
reset button 11
RJ-45 10
RS-232 terminal cable 14
RST 11
RST button 37

S

security 5
  change security level 22
self-view 5
serial connector 10
SNMP
  agent 25
Software Upgrade Utility 26
software upgrade utility procedures
  install and launch 30
  use utility 30
summary of features 2

T

T.120 4
terminal cable 14
topologies 8
transcoding 4

U

unit dimensions 37
upgrade software 29
user types 2
  administrators 2
  conference participants 2
  Moderators 2
  operators 2

V

video
  formats 4
video quality 2, 4

W

web interface 26
web-based management and control 3